PRESSURE SWITCHES

- **Micrometer adjustment**
- **Three pressure ranges**
- **Low differential**
- **Compact design**

0RDERING CODE

PS–02–1–10

- Design series
- Pressure range 1,2,3,4
- Pipe diameter (1/4 NPT)
- Pressure switch

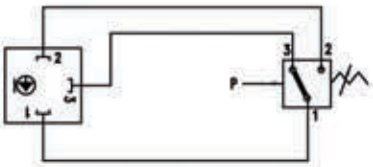

Max. Switching Capacity :
250VAC/7A,30VDC/7A
Connection:
NCC:clamp 1–3
NOC:clamp 1–2

TYPE CODING

Types	Pipe Dia.	Max. Pressure (PSI)	Pressure Range (PSI)	Weight (lbs)
PS–02–1–10	1/4	4500	150-1000	1.25
PS–02–2–10	1/4	4500	400-2200	1.25
PS–02–3–10	1/4	4500	700-3400	1.25
PS-02-4-10	1/4	4500	730-5800	1.25

PERFORMANCE CURVES

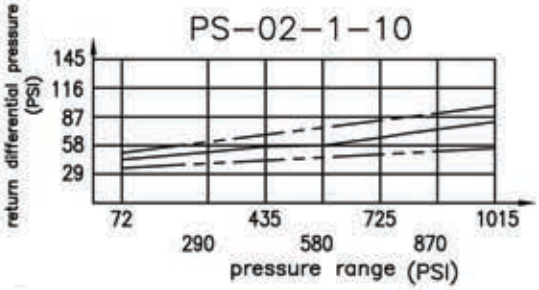

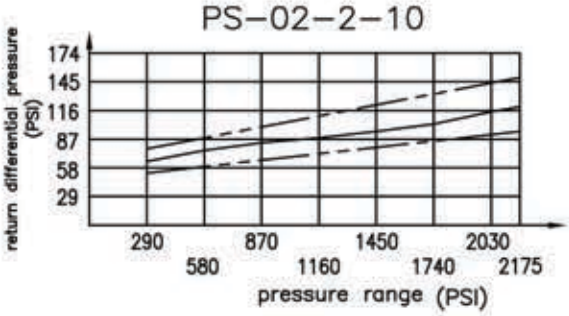

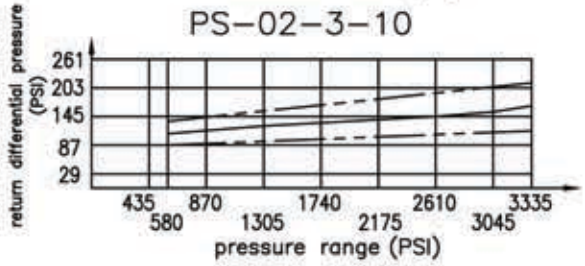

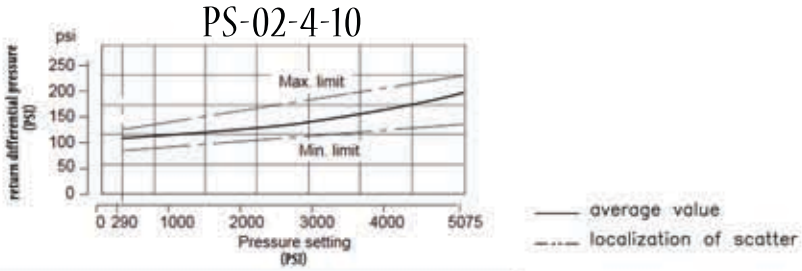

PRESSURE SWITCHES

DIMENSIONS (inches)

PS–02–*10

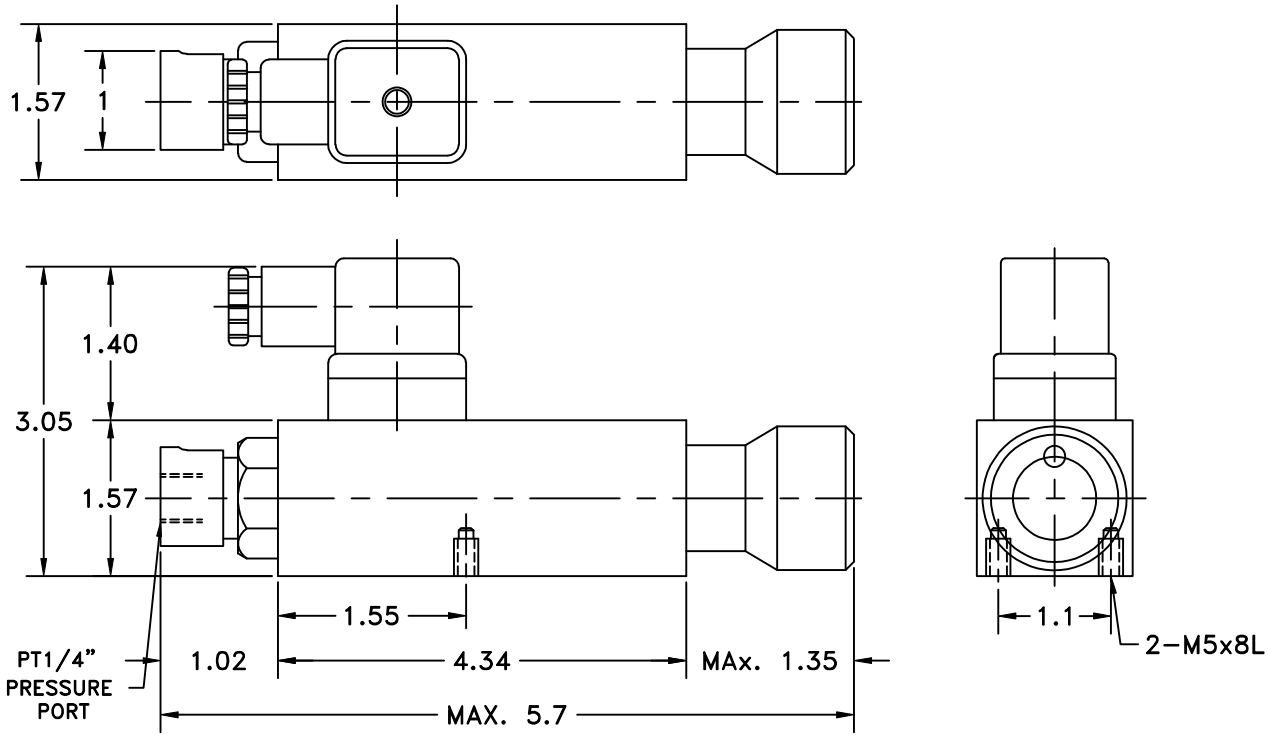

CROSS SECTION DIAGRAM

PS–02–*–10

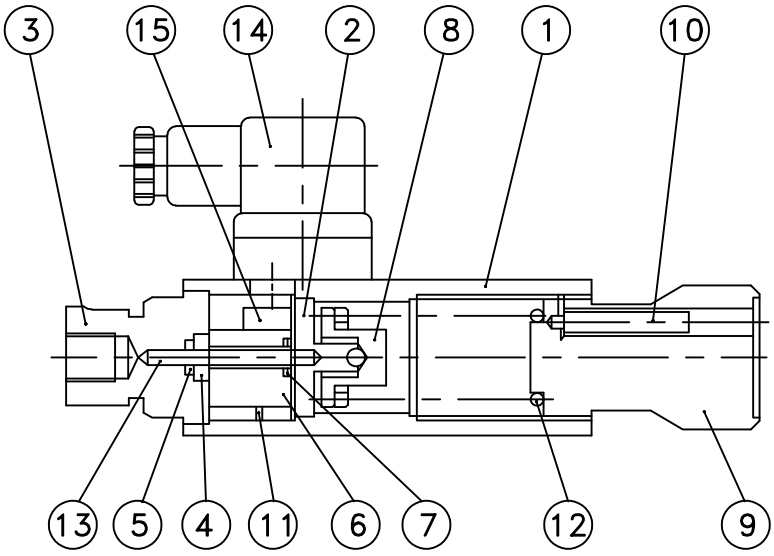

NO.	DESCRIPTION
1	Body
2	Retainer (1)
3	Nut
4	Set Nut
5	Rod seal
6	Guider
7	Retainer (2)
8	Adjust Screw
9	Set screw
10	Locking screw
11	Spring pin
12	Spring
13	Rod
14	Connector
15	Micro switch

PRESSURE SWITCHES SW-02-4-20

FEATURES:

- Economical
- High Pressure Ratings
- Wide Adjustment Range
- Low Differential
- Graduated Micrometer Adjustment
- Compact Design
- Locking nut for panel mount

APPLICATIONS:

- Automated Circuit Control
- System Alarm
- Pilot Light Activation
- System Overload Protection

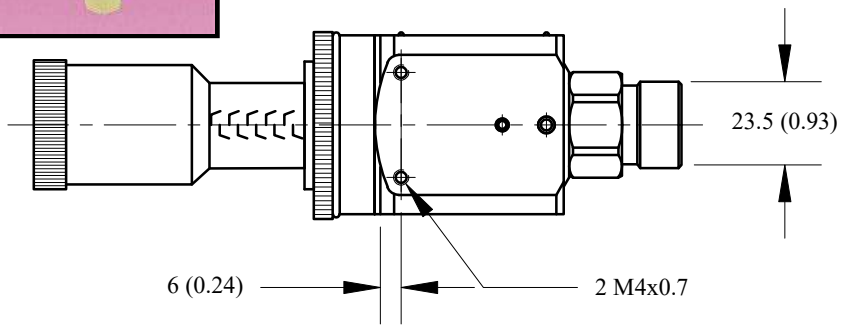

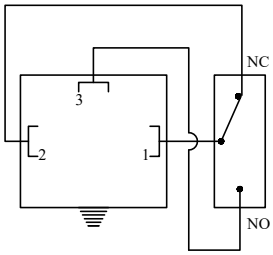

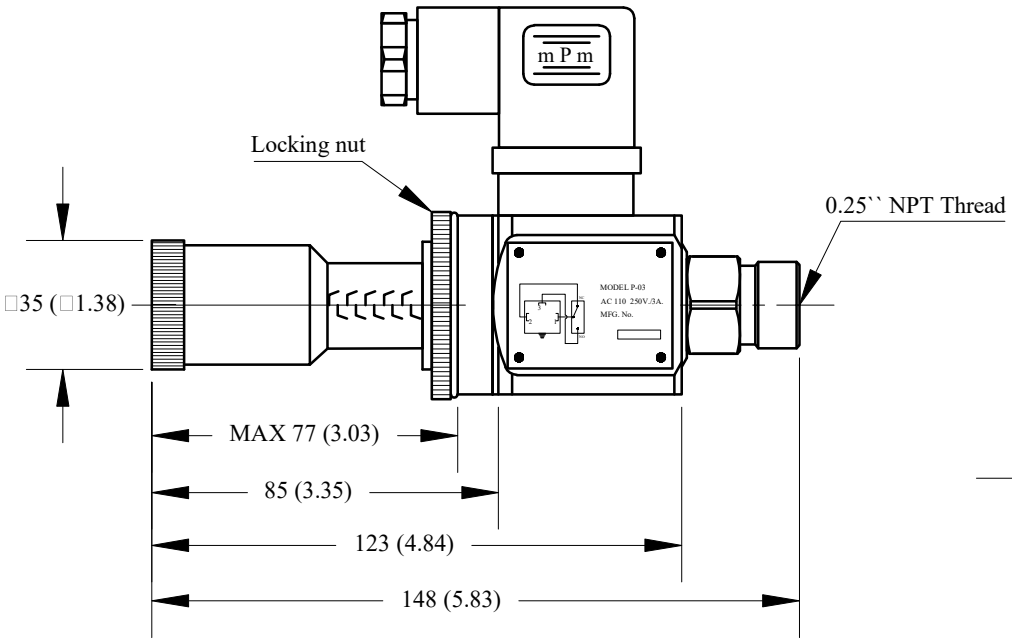

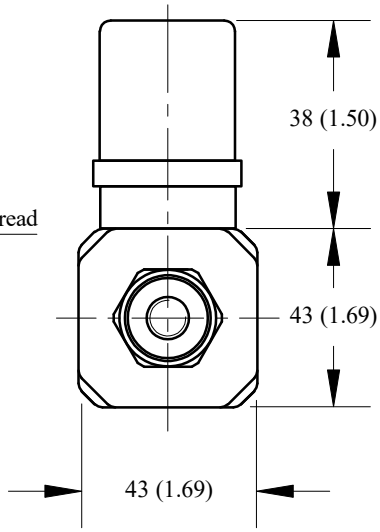

Model	Valve Size	Pressure Range	Electrical rating
SW02-1-22	1/4"	75 - 900 PSI (5-60 bar)	DC24 Volt
SW02-2-22	1/4"	200 -900 PSI (15-60 bar)	AC110 -250 Volt
SW02-3-22	1/4"	450-3000 PSI (30-210 bar)	3 AMP
SW02-4-22	1/4""	725-5000 PSI (50-350 bar)	